Side

Spotlight Series

www.neralight.com

NERA LIGHT

SIDE I

SKU: ISS-423 Categories: Interior, Spotlights

FEATURES

Mechanical
Body: Aluminium
Finish: Electrostatic powder painted
Installation: Ceiling recessed
Diffuser: Transparent safety glass
Optics: Aluminium reflector

Electrical
Driver: LED driver with external connection
Light source: COB LED
Frequency: 220-240V 50/60 Hz
Lifetime: 50.000 hours
Pf>0.90
Operating Temperature: -20 / +50

Options
RAL selection
CRI>90
CRI<97
DALI
0-10V / 1-10V
Casambi
Emergency kit /
CBS connection
GST connector

Optical
Beam angle: 15-30 degrees
UGR: <21
CRI>80
McAdams Step<3

Specifications

CRI ≥ 80 | 360° | 90° | COB LED | 3H EM | IP20 | CE | UKCA

Photometric Data

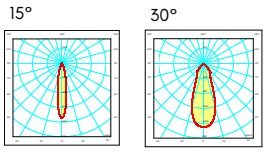

CCT Values

Technical Drawing

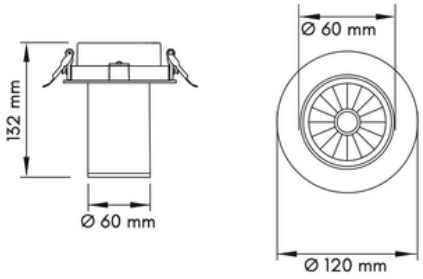

Art. No.	Watt	Lumen	CCT	Dimensions (WxLxH)mm.	Cut-out (mm.)	Weight (kg.)
ISS-423-010-827	10W	1050	2700K	120x120x132	105x105	0,4 kg.
ISS-423-010-830	10W	1130	3000K	120x120x132	105x105	0,4 kg.
ISS-423-010-840	10W	1200	4000K	120x120x132	105x105	0,4 kg.
ISS-423-010-865	10W	1250	6500K	120x120x132	105x105	0,4 kg.

SIDE II

SKU: ISS-424 Categories: Interior, Spotlights

FEATURES

Mechanical
Body: Aluminium
Finish: Electrostatic powder painted
Installation: Ceiling recessed
Diffuser: Transparent safety glass
Optics: Aluminium reflector

Electrical
Driver: LED driver with external connection
Light source: COB LED
Frequency: 220-240V 50/60 Hz
Lifetime: 50.000 hours
Pf>0.90
Operating Temperature: -20 / +50

Options
RAL selection
CRI>90
CRI<97
DALI
0-10V / 1-10V
Casambi
Emergency kit /
CBS connection
GST connector

Optical
Beam angle: 15-30-45 degrees
UGR: <21
CRI>80
McAdams Step<3

Specifications

CRI ≥ 80 | 350° | 90° | COB LED | 3H EM | IP20 | CE | UKCA

Photometric Data

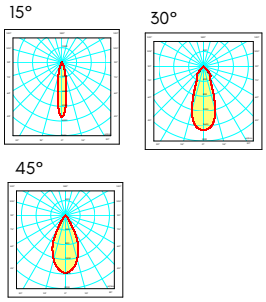

CCT Values

Technical Drawing

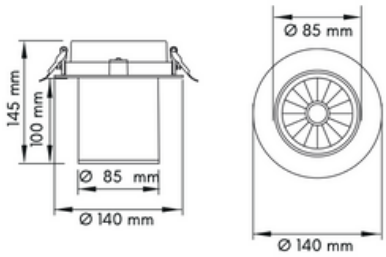

Art. No.	Watt	Lumen	CCT	Dimensions (WxLxH)mm.	Cut-out (mm.)	Weight (kg.)
ISS-424-015-827	15W	1515	2700K	140x140x145	120x120	1,0 kg.
ISS-424-015-830	15W	1600	3000K	140x140x145	120x120	1,0 kg.
ISS-424-015-840	15W	1710	4000K	140x140x145	120x120	1,0 kg.
ISS-424-015-865	15W	1750	6500K	140x140x145	120x120	1,0 kg.
ISS-424-020-827	20W	2100	2700K	140x140x145	120x120	1,0 kg.
ISS-424-020-830	20W	2230	3000K	140x140x145	120x120	1,0 kg.
ISS-424-020-840	20W	2300	4000K	140x140x145	120x120	1,0 kg.
ISS-424-020-865	20W	2350	6500K	140x140x145	120x120	1,0 kg.

SIDE III

SKU: ISS-425 Categories: Interior, Spotlights

FEATURES

Mechanical
Body: Aluminium
Finish: Electrostatic powder painted
Installation: Ceiling recessed
Diffuser: Transparent safety glass
Optics: Aluminium reflector

Electrical
Driver: LED driver with external connection
Light source: COB LED
Frequency: 220-240V 50/60 Hz
Lifetime: 50.000 hours
Pf>0.90
Operating Temperature: -20 / +50

Options
RAL selection
CRI>90
CRI<97
DALI
0-10V / 1-10V
Casambi
Emergency kit /
CBS connection
GST connector

Optical
Beam angle: 15-30-45-60 degrees
UGR: <21
CRI>80
McAdams Step<3

Specifications

CRI ≥ 80 | 350° | 90° | COB LED | 3H EM | IP20 | CE | UKCA

Photometric Data

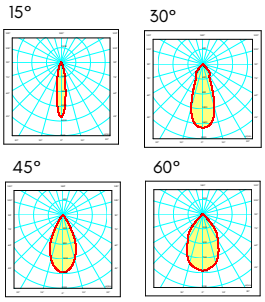

CCT Values

Technical Drawing

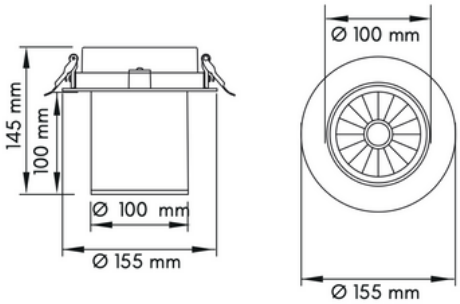

Art. No.	Watt	Lumen	CCT	Dimensions (WxLxH)mm.	Cut-out (mm.)	Weight (kg.)
ISS-425-030-827	30W	3150	2700K	155x155x145	145x145	1,2 kg.
ISS-425-030-830	30W	3310	3000K	155x155x145	145x145	1,2 kg.
ISS-425-030-840	30W	3400	4000K	155x155x145	145x145	1,2 kg.
ISS-425-030-865	30W	3490	6500K	155x155x145	145x145	1,2 kg.
ISS-425-040-827	40W	4080	2700K	155x155x145	145x145	1,2 kg.
ISS-425-040-830	40W	4200	3000K	155x155x145	145x145	1,2 kg.
ISS-425-040-840	40W	4370	4000K	155x155x145	145x145	1,0 kg.
ISS-425-040-865	40W	4500	6500K	155x155x145	145x145	1,2 kg.